REVISION HISTORY			
REV.	DESCRIPTION	DATE	DRAWN BY
1	ORIGINAL PRINT	02/01/2018	C. THEISS

RATIO
4:1 - (am-3836)

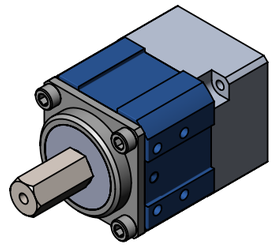

RATIO
16:1 - (am-3837)

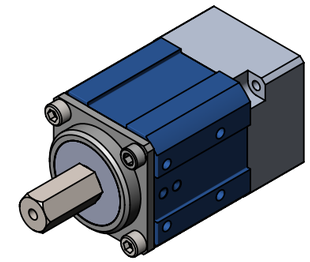

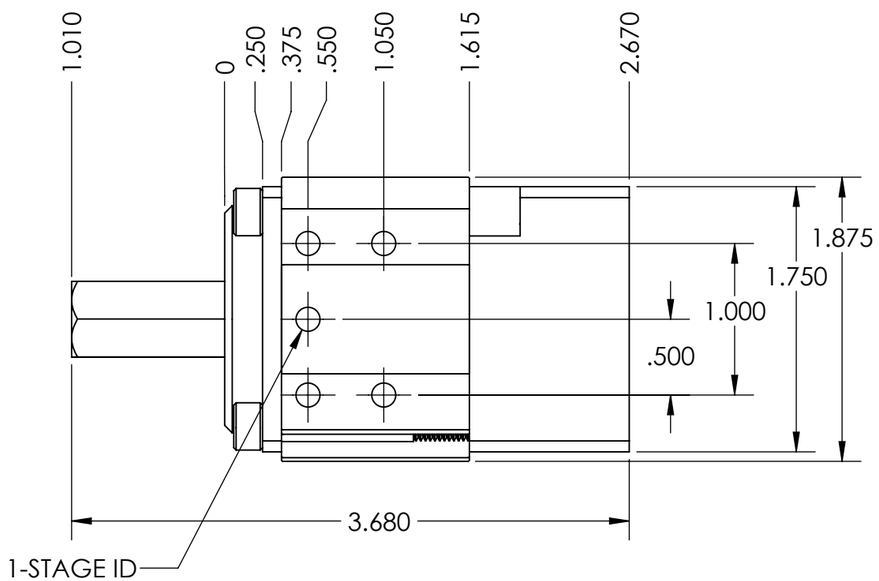

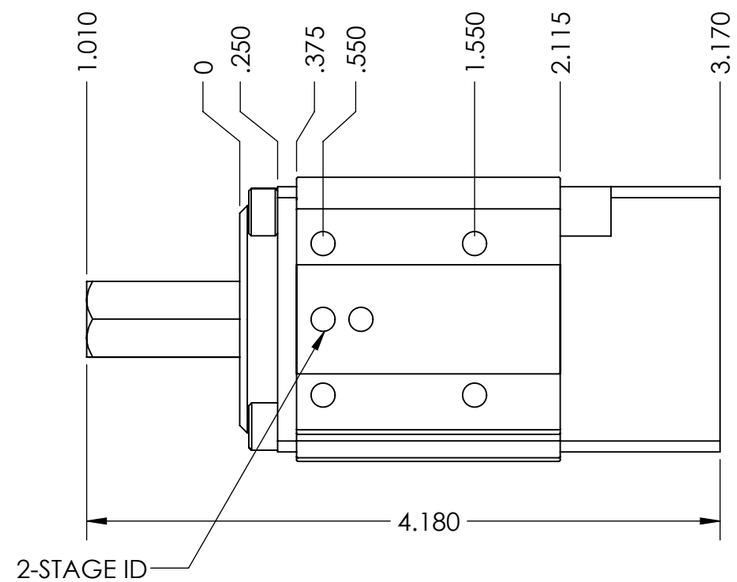

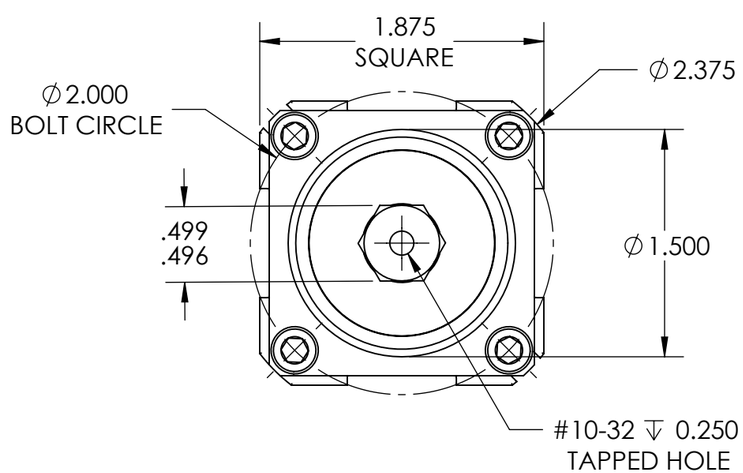

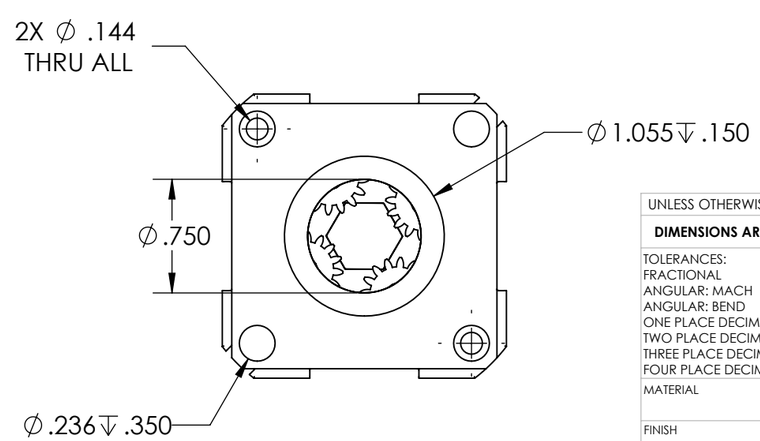

*** SEE CAD FOR ADDITIONAL TOOLPATH INFO***

UNLESS OTHERWISE SPECIFIED:		COMMENTS:
DIMENSIONS ARE IN INCHES		DUAL DIMENSIONS ARE IN MILLIMETERS.
TOLERANCES:		BREAK ALL SHARP EDGES.
FRACTIONAL	±1/16	
ANGULAR: MACH	±1°	
ANGULAR: BEND	±5°	
ONE PLACE DECIMAL	±0.1	
TWO PLACE DECIMAL	±0.01	
THREE PLACE DECIMAL	±0.005	
FOUR PLACE DECIMAL	±0.0005	
MATERIAL		
FINISH		
DO NOT SCALE DRAWING		

	NAME	DATE
CHECKED		
ENG APPR.		
MFG APPR.		
Q.A.		

AndyMark

TITLE:

DYNAMO SPORT SERIES

SIZE	DWG. NO.	REV
B		1

SCALE: 1:1 | SHEET 1 OF 5

REVISION HISTORY			
REV.	DESCRIPTION	DATE	DRAWN BY
1	ORIGINAL PRINT	02/01/2018	C. THEISS

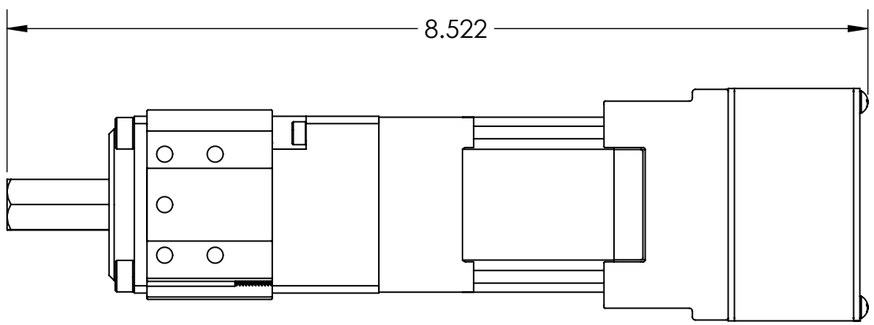

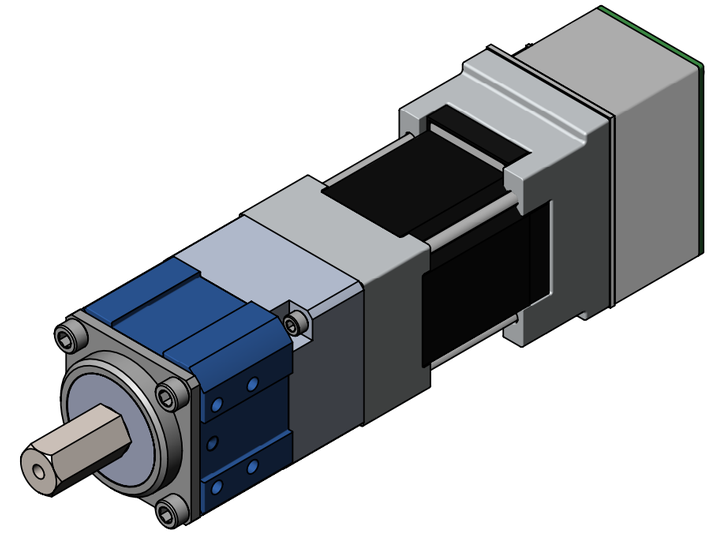

RATIO
4:1 - (am-3836)

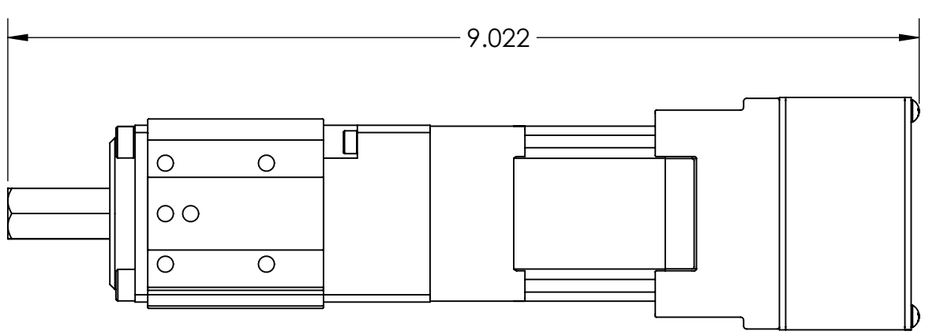

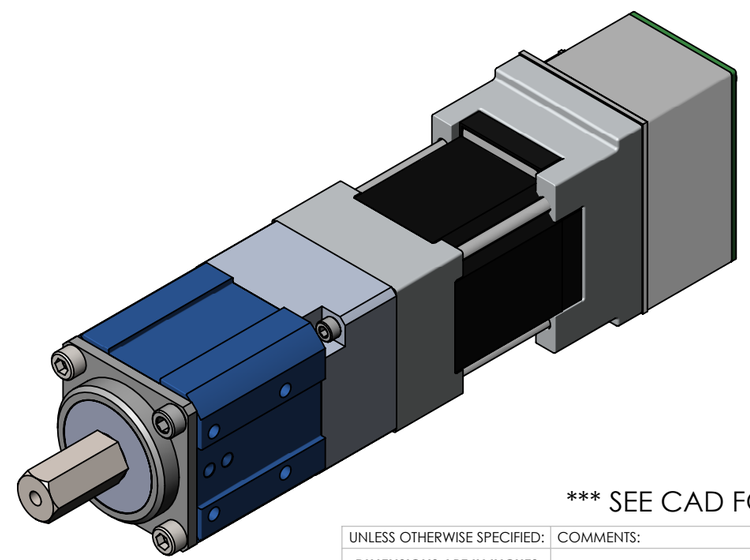

RATIO
16:1 - (am-3837)

MOTOR NOT INCLUDED

*** SEE CAD FOR ADDITIONAL TOOLPATH INFO***

UNLESS OTHERWISE SPECIFIED:		COMMENTS:
DIMENSIONS ARE IN INCHES		DUAL DIMENSIONS ARE IN MILLIMETERS.
TOLERANCES:		BREAK ALL SHARP EDGES.
FRACTIONAL	±1/16	
ANGULAR: MACH	±1°	
ANGULAR: BEND	±5°	
ONE PLACE DECIMAL	±0.1	
TWO PLACE DECIMAL	±0.01	
THREE PLACE DECIMAL	±0.005	
FOUR PLACE DECIMAL	±0.0005	
MATERIAL		
FINISH		
DO NOT SCALE DRAWING		

	NAME	DATE
CHECKED		
ENG APPR.		
MFG APPR.		
Q.A.		

AndyMark®

TITLE:

DYNAMO SPORT SERIES w/MOTOR

SIZE	DWG. NO.	REV
B		1

SCALE: 2:3 | SHEET 2 OF 5

REVISION HISTORY			
REV.	DESCRIPTION	DATE	DRAWN BY
1	ORIGINAL PRINT	02/01/2018	C. THEISS

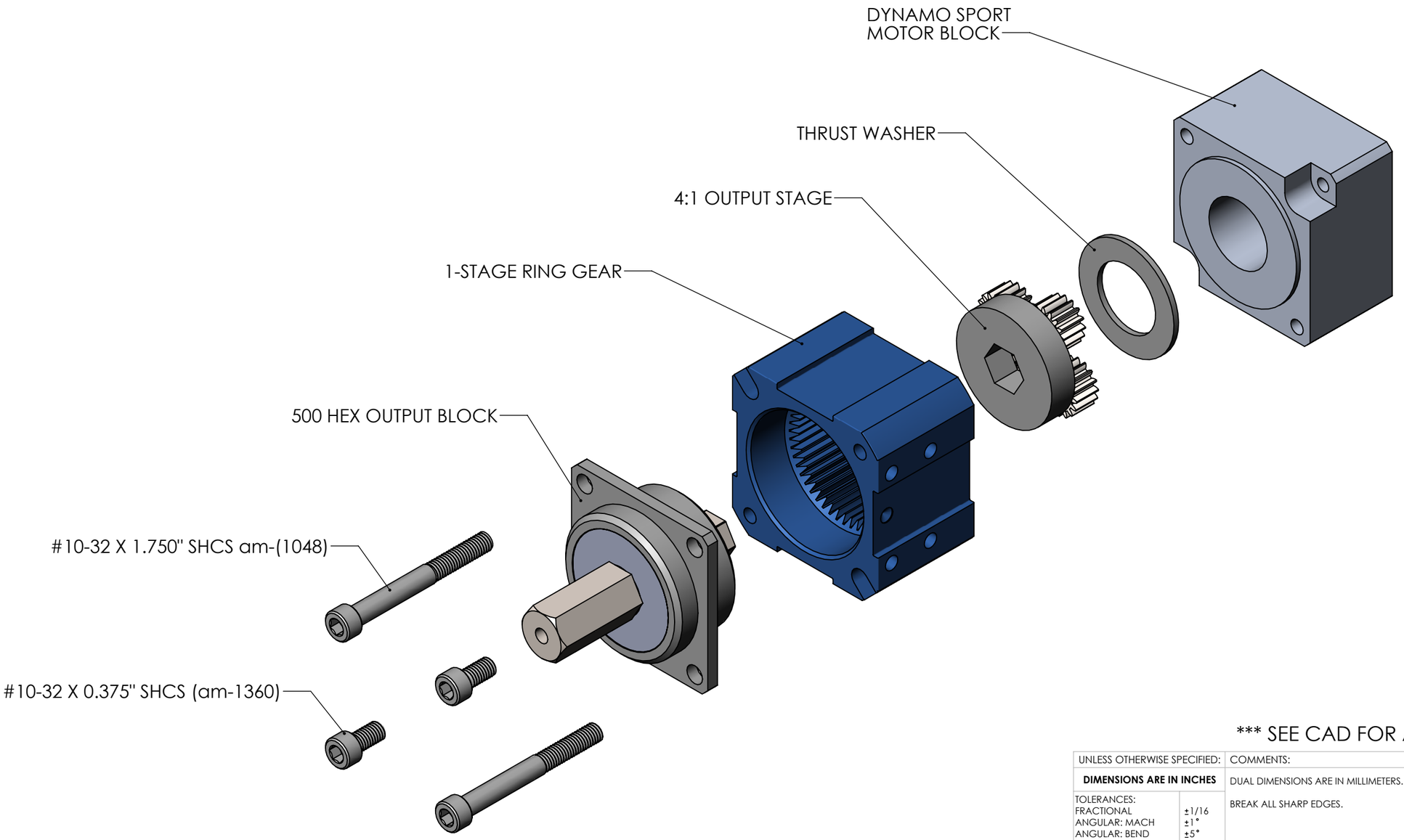

MOTOR NOT INCLUDED

*** SEE CAD FOR ADDITIONAL TOOLPATH INFO***

UNLESS OTHERWISE SPECIFIED:		COMMENTS:			AndyMark
DIMENSIONS ARE IN INCHES		DUAL DIMENSIONS ARE IN MILLIMETERS.			TITLE:
TOLERANCES:		BREAK ALL SHARP EDGES.			DYNAMO SPORT SERIES w/MOTOR
FRACTIONAL	±1/16				
ANGULAR: MACH	±1°				
ANGULAR: BEND	±5°				
ONE PLACE DECIMAL	±0.1				
TWO PLACE DECIMAL	±0.01				
THREE PLACE DECIMAL	±0.005				
FOUR PLACE DECIMAL	±0.0005				
MATERIAL			NAME	DATE	SIZE B / DWG. NO. / REV 1
		CHECKED			
FINISH		ENG APPR.			
		MFG APPR.			
DO NOT SCALE DRAWING		Q.A.			SCALE: 1:1 / SHEET 3 OF 5

REVISION HISTORY			
REV.	DESCRIPTION	DATE	DRAWN BY
1	ORIGINAL PRINT	02/01/2018	C. THEISS

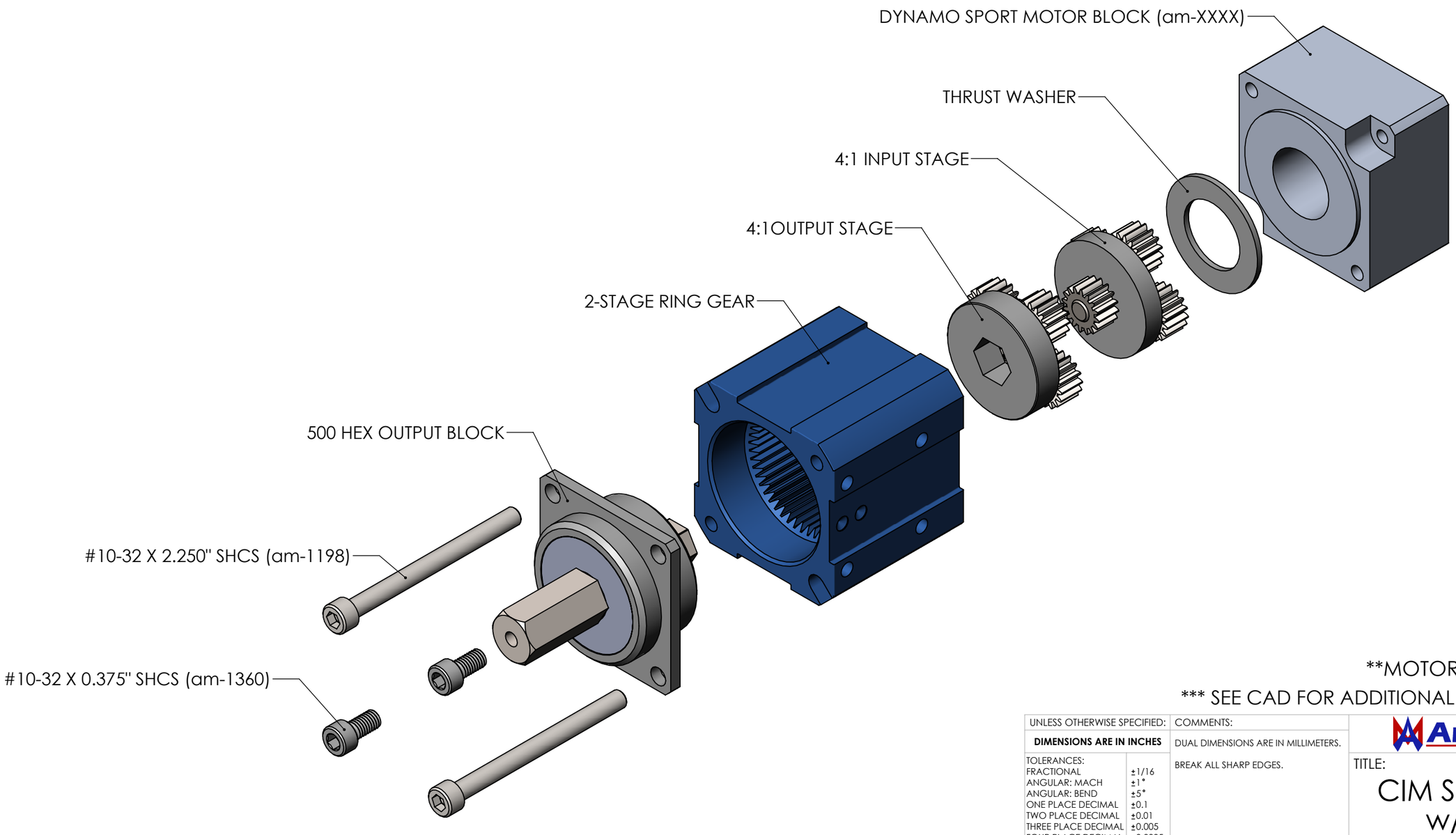

MOTOR NOT INCLUDED

*** SEE CAD FOR ADDITIONAL TOOLPATH INFO***

UNLESS OTHERWISE SPECIFIED:		COMMENTS:
DIMENSIONS ARE IN INCHES		DUAL DIMENSIONS ARE IN MILLIMETERS.
TOLERANCES:		BREAK ALL SHARP EDGES.
FRACTIONAL	±1/16	
ANGULAR: MACH	±1°	
ANGULAR: BEND	±5°	
ONE PLACE DECIMAL	±0.1	
TWO PLACE DECIMAL	±0.01	
THREE PLACE DECIMAL	±0.005	
FOUR PLACE DECIMAL	±0.0005	
MATERIAL		
FINISH		
DO NOT SCALE DRAWING		

	NAME	DATE
CHECKED		
ENG APPR.		
MFG APPR.		
Q.A.		

AndyMark

TITLE:

CIM SPORT SERIES w/MOTOR

SIZE	DWG. NO.	REV
B		1

SCALE: 1:1 SHEET 4 OF 5

REVISION HISTORY			
REV.	DESCRIPTION	DATE	DRAWN BY
1	ORIGINAL PRINT	02/01/2018	C. THEISS

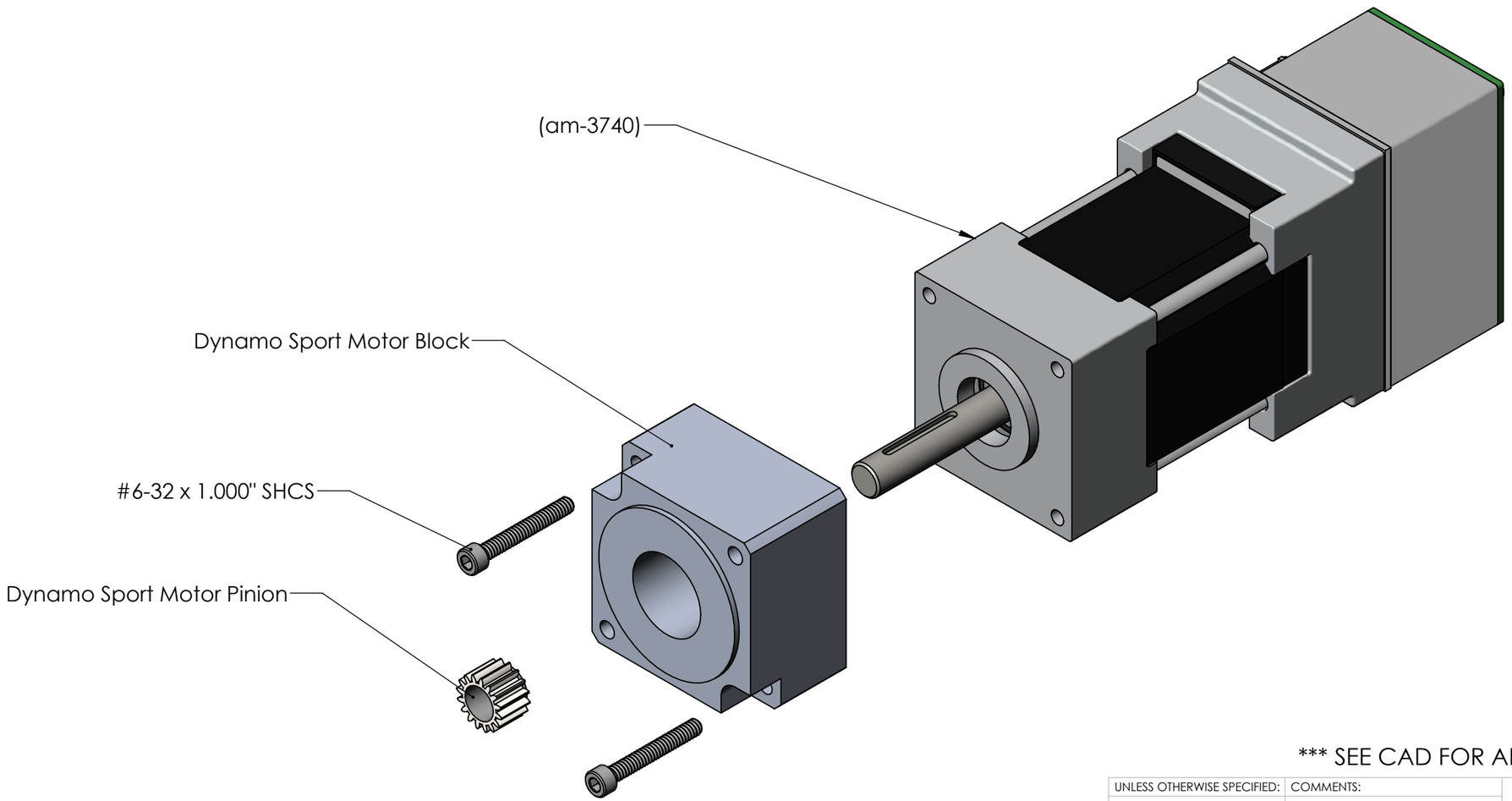

MOTOR NOT INCLUDED

*** SEE CAD FOR ADDITIONAL TOOLPATH INFO***

UNLESS OTHERWISE SPECIFIED:		COMMENTS:
DIMENSIONS ARE IN INCHES		DUAL DIMENSIONS ARE IN MILLIMETERS.
TOLERANCES:		BREAK ALL SHARP EDGES.
FRACTIONAL	±1/16	
ANGULAR: MACH	±1°	
ANGULAR: BEND	±5°	
ONE PLACE DECIMAL	±0.1	
TWO PLACE DECIMAL	±0.01	
THREE PLACE DECIMAL	±0.005	
FOUR PLACE DECIMAL	±0.0005	
MATERIAL		
FINISH		
DO NOT SCALE DRAWING		

	NAME	DATE
CHECKED		
ENG APPR.		
MFG APPR.		
Q.A.		

AndyMark

TITLE:

DYNAMO MOTOR BLOCK ASSEMBLY

SIZE	DWG. NO.	REV
B		1

SCALE: 1:1 SHEET 5 OF 5